THE UNIVERSITY OF CHICAGO

JINA

Argonne NATIONAL LABORATORY

Kavli Institute for Cosmological Physics AT THE UNIVERSITY OF CHICAGO

Future research of $^{12}C(\alpha,\gamma)^{16}O$

Claudio Ugalde

$^{12}C(\alpha,\gamma)^{16}O$ Reaction

Key reaction for stellar structure, evolution, and nucleosynthesis in stars.

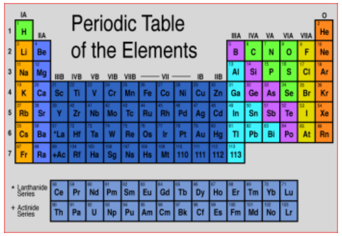

Affects the synthesis of most of the elements of the periodic table

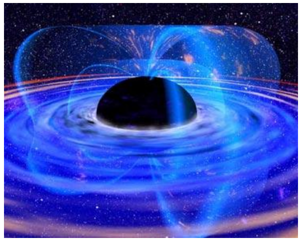

Determines whether for a given initial mass, a star will become a black hole or a neutron star

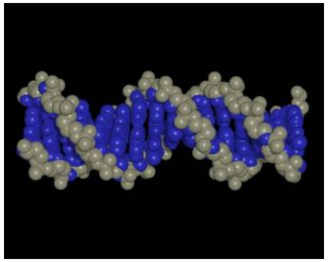

Sets the C to O ratio in the universe

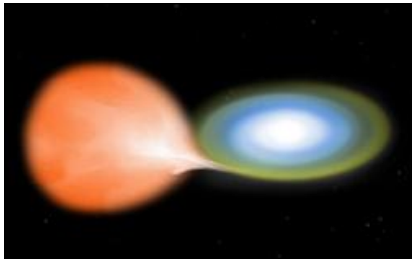

The variation of the C/O ratio in the progenitor might be a cause of the variation of SNIa brightness

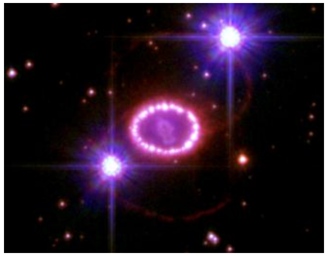

Determines the minimum mass a star requires to become a core collapse supernova

Affects the constraints on the age of stellar populations from White Dwarfs

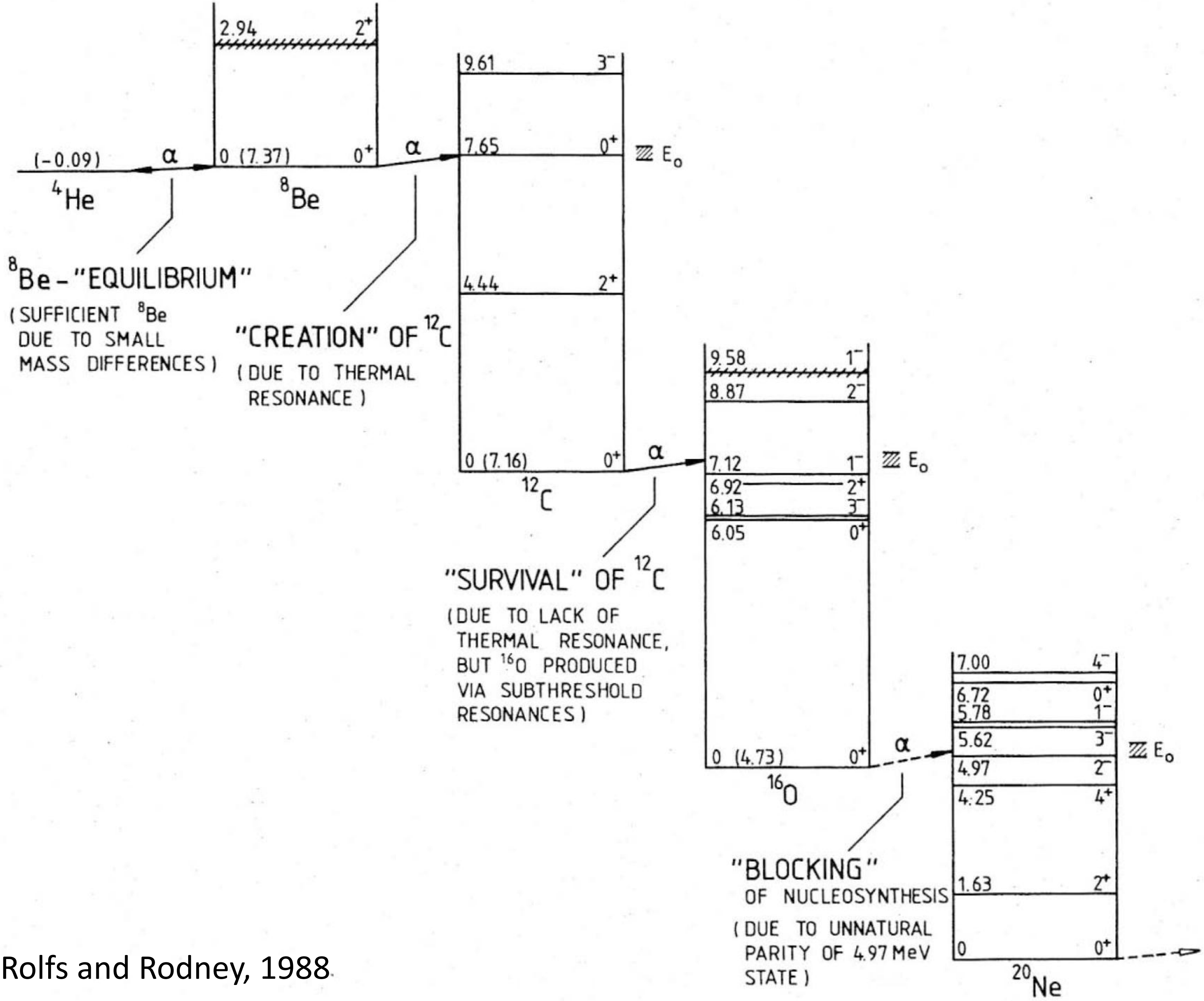

Rolfs and Rodney, 1988

$$N_A\langle\sigma\upsilon\rangle = N_A\sqrt{\frac{8}{\pi\mu(kT)^3}}\int_0^\infty \sigma(E)E\exp\left(-\frac{E}{kT}\right)dE$$

From experiments

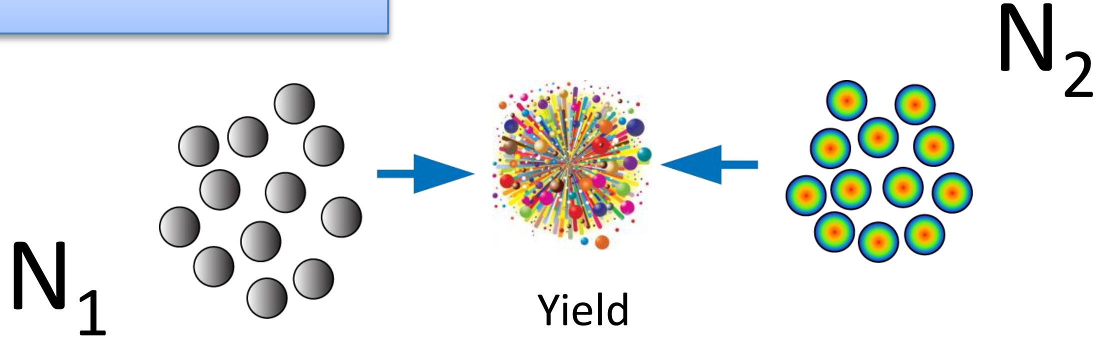

$$\text{Yield} \sim \boxed{N_1N_2\sigma}\,g$$

$$g = \varepsilon * (1\text{-bkgd/signal})$$

$$0 < g < 1$$

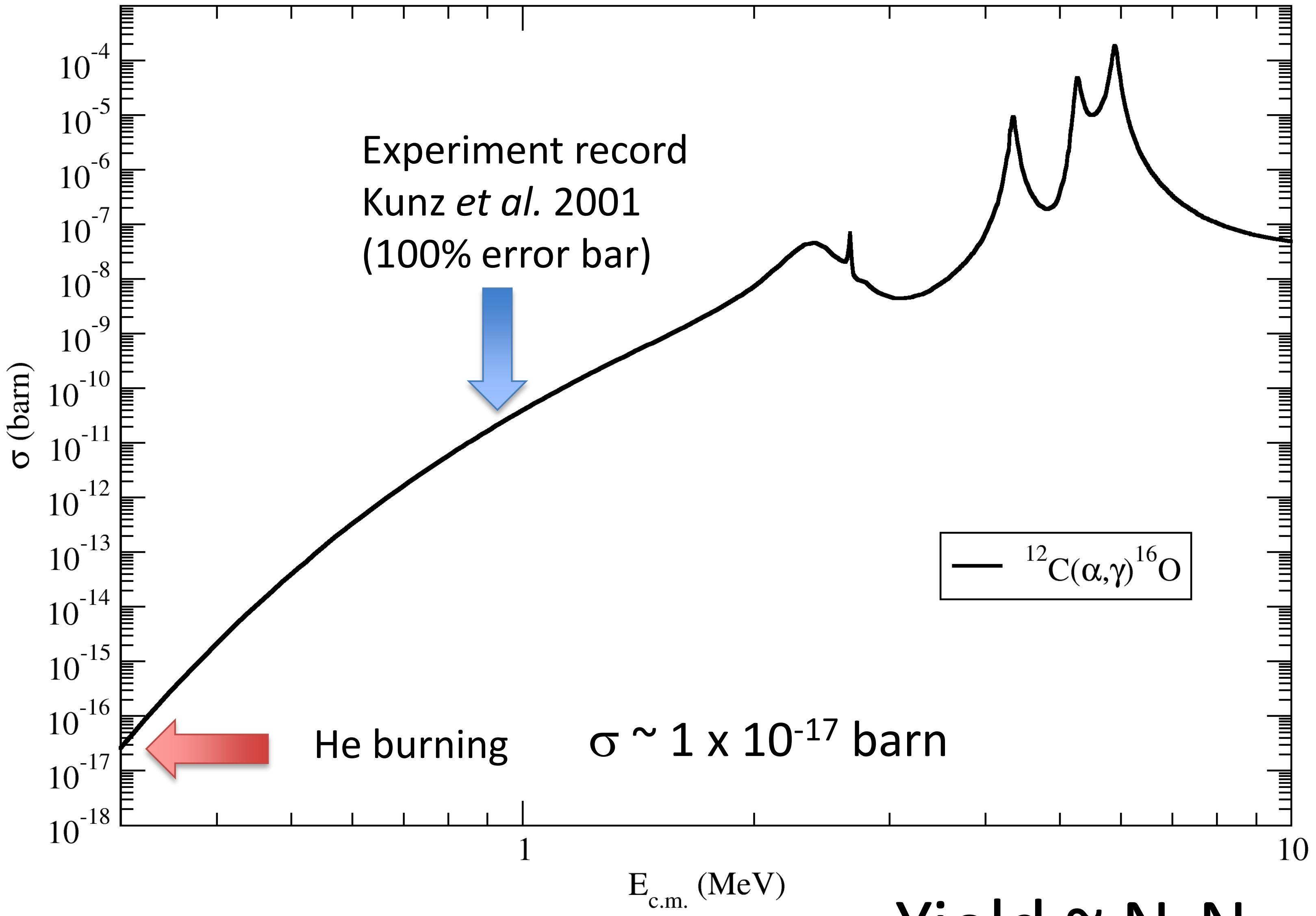

Experiment record
Kunz *et al.* 2001
(100% error bar)

He burning

$\sigma \sim 1 \times 10^{-17}$ barn

Yield ~ $N_1N_2\sigma g$

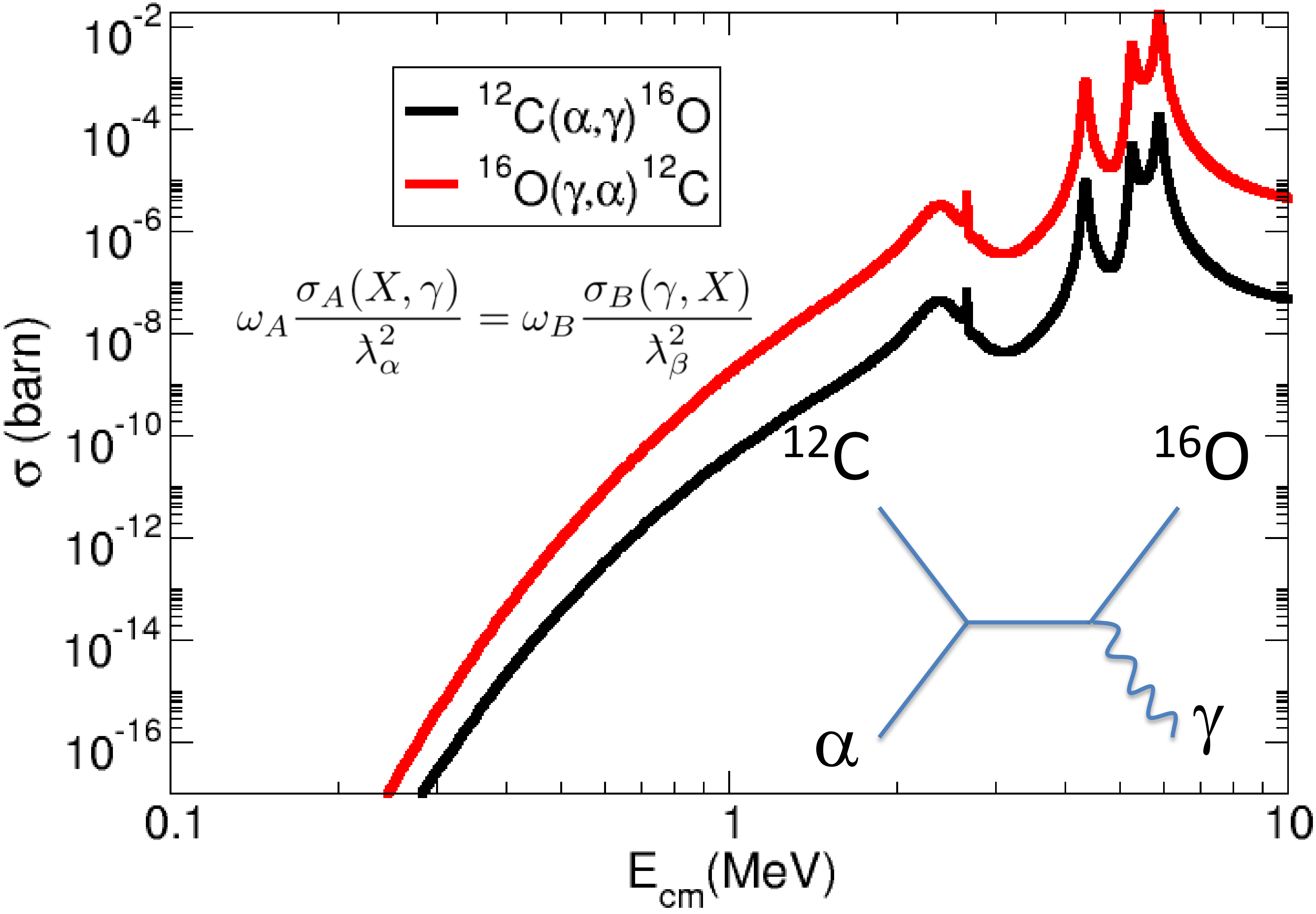

$$\omega_A \frac{\sigma_A(X,\gamma)}{\lambda_\alpha^2} = \omega_B \frac{\sigma_B(\gamma,X)}{\lambda_\beta^2}$$

Bubble chamber

C. Ugalde[1,7], B. DiGiovine[1], D. Henderson[1], R. J. Holt[1], K.E. Rehm[1], A. Robinson[7], A. Sonnenschein[4], A. Tonchev[2,5], R. Raut[2,5], G. Rusev[2,5], A. Champagne[2,3], N. Sturchio[6]

[1]Argonne National Laboratory, [2]Triangle Universities Nuclear Laboratory, [3]University of North Carolina at Chapel Hill, [4]Fermi National Accelerator Laboratory, [5]Duke University, [6]University of Illinois at Chicago,[7]University of Chicago

beam | target | signal

$$\gamma + {}^{16}\mathrm{O} \text{ --> } {}^{12}\mathrm{C} + \alpha$$

- The target density is 1000-10000x higher than gas targets.
- Superheated water will nucleate from α and ${}^{12}C$ recoils
- The detector is insensitive to γ-rays.
- Prototype tested at HIγS

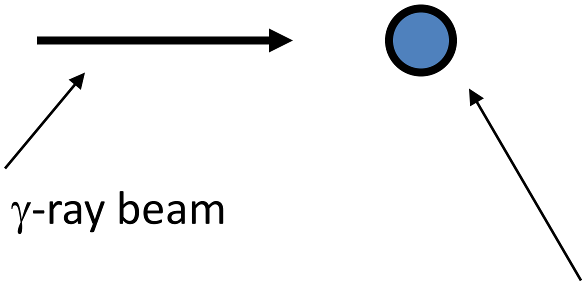

Monochromatic γ-ray beam from HIγS

H_2O bubble chamber

STAR

Outlook

Kunz 2001

N1= 2×10^{18} Carbon implanted particles
N2= 0.5 mA = 3.12×10^{15} α-particles/s

in 1 year
N1 N2 = 1.97×10^{41}
Yield = 2 events in one year

DIANA + JENSA (DUSEL)

N1= 1×10^{19} helium particles gas target
N2= 10 mA =6.24×10^{16} carbon part/s

in 1 year
N1 N2 = 1.97×10^{43}
Yield = 200 events in one year

LUNA-MV (Gran Sasso)

N1= 2×10^{18} Carbon implanted particles
N2= 0.5 mA = 3.12×10^{15} α-particles/s

in 1 year
N1 N2 = 1.97×10^{41}
Yield = 2 events in one year

Bubble + HIγS2

N1= 3.35×10^{23} particles in liquid target
N2= 2×10^{10} γ/s

in 1 year
N1 N2 = 2.11×10^{41}
Reciprocity -> x100
Yield = 200 events in one year

Next generation light sources

ELI-NP, Romania 2015 V. Zamfir 2011

Bubble + ELI-NP (Phase 1)

N1= 3.35×10^{23} particles in liquid target
N2= 1×10^{13} γ/s

in 1 year
N1 N2 = 2.11×10^{44}
Reciprocity -> x100
Yield = 200,000 events in one year

Phase 1
Very intense (10^{13} γ/s), brilliant γ-ray beam, 0.1 % bandwidth, with E= 19 MeV

Phase 2 (2018-2020) -> 10^{15} γ/s

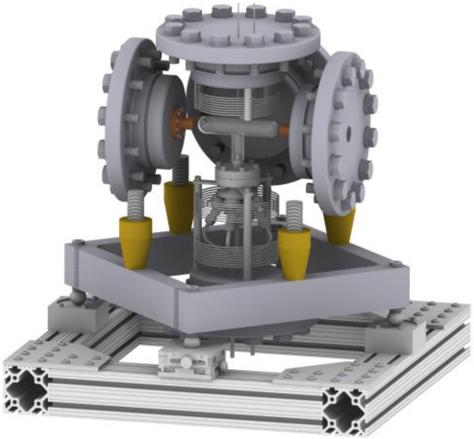

STAR

Conclusions

The above considerations apply to other (X,γ) processes for which suitable stable liquid targets can be found. Examples include ^{12}C+^{12}C, 3α->^{12}C, ^{22}Ne(α,γ), and other (p,γ) and (α,γ) reactions.

In particular, the ^{12}C(α,γ) reaction has remained unimproved for more than 10 years. Any crazy ideas are now welcome.

Thanks!

STAR

$$\frac{\partial Y_i}{\partial t} = -\rho \sum_j \frac{a_i}{1+\delta_{ij}} Y_i Y_j N_A \langle \sigma \upsilon \rangle_{ij} + \rho \sum_{k,l} \frac{b_i}{1+\delta_{kl}} Y_k Y_i N_A \langle \sigma \upsilon \rangle_{kl}$$

Y_i abundance (by number) of species *i*

$N_A \langle \sigma \upsilon \rangle$ reaction rate

Composition change

Energy generation

$$\frac{\partial L_r}{\partial M_r} = \varepsilon_n - \varepsilon_\nu - C_p \dot{T} + \frac{\delta}{\rho} \dot{P}$$

$$\varepsilon_n = \rho \sum_j \frac{1}{1+\delta_{ij}} Y_i Y_j Q_{ij} N_A \langle \sigma \upsilon \rangle_{ij}$$

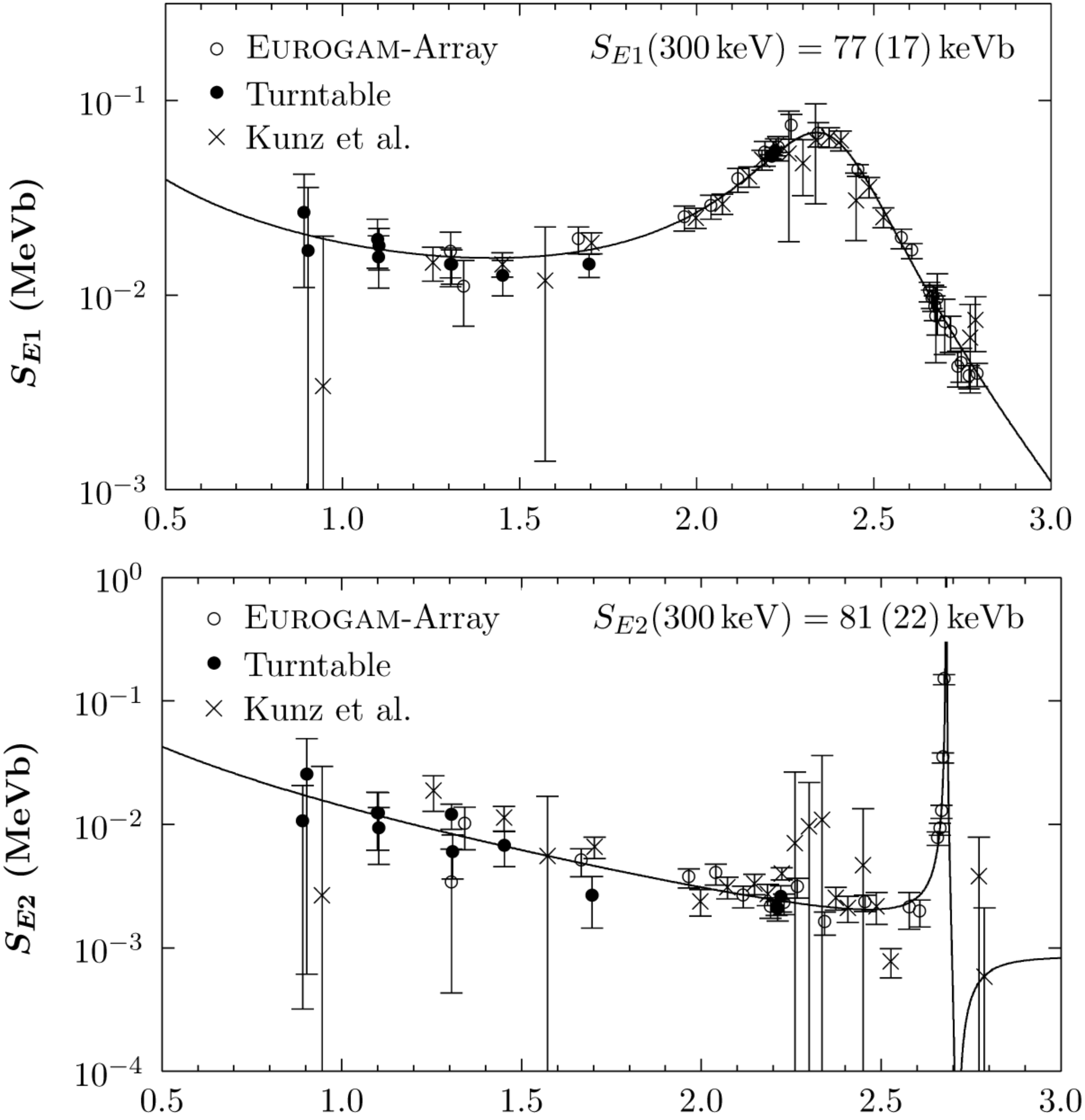

EUROGAM-Array
Turntable
Kunz et al.
$S_{E1}(300\,\mathrm{keV}) = 77\,(17)\,\mathrm{keVb}$
S_{E1} (MeVb)
10^{-1}
10^{-2}
10^{-3}
0.5
1.0
1.5
2.0
2.5
3.0
EUROGAM-Array
Turntable
Kunz et al.
$S_{E2}(300\,\mathrm{keV}) = 81\,(22)\,\mathrm{keVb}$
S_{E2} (MeVb)
10^{0}
10^{-1}
10^{-2}
10^{-3}
10^{-4}
0.5
1.0
1.5
2.0
2.5
3.0

Astrophysical S-factor for $^{12}C(\alpha,\gamma)^{16}O$

$$S = E\sigma e^{(2\pi\eta)}$$

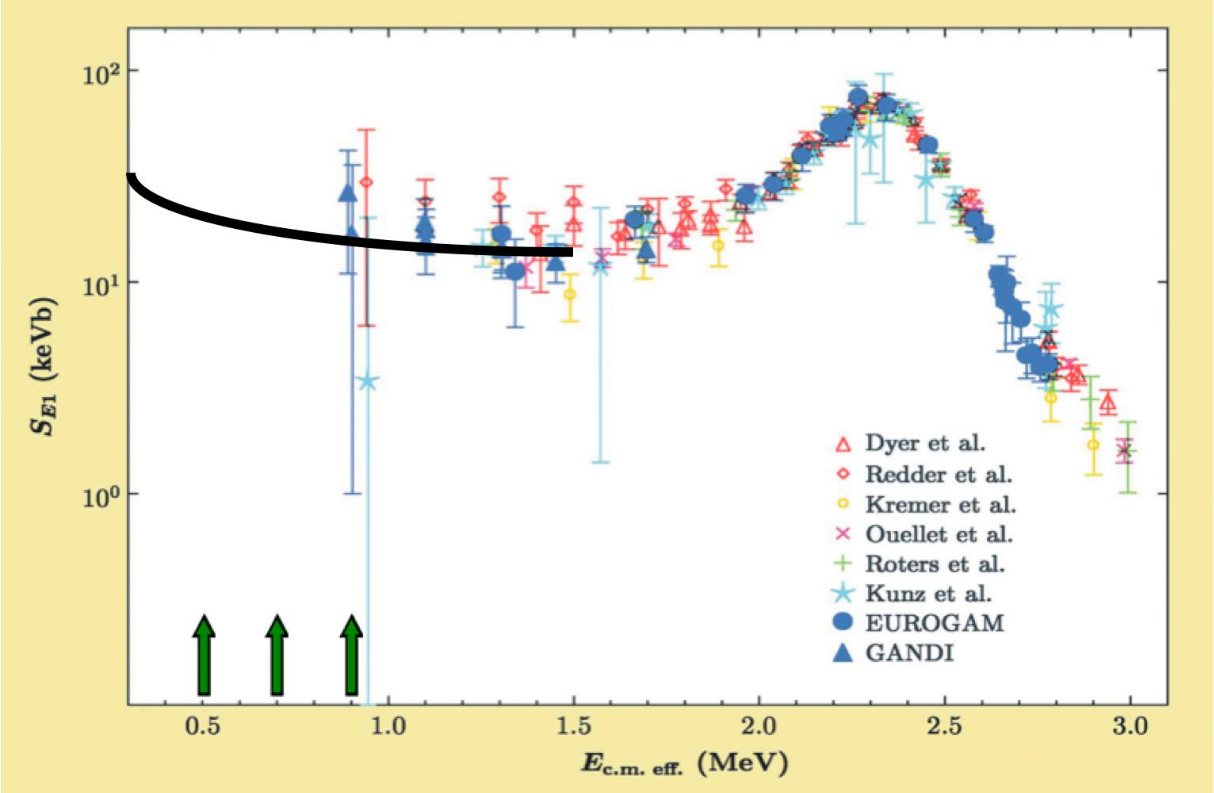

Compilations of results

Author	S(300keV) (keV-b)
Buchmann (2005)	102-198
Caughlan and Fowler (1988)	120-220
Hammer (2005)	123-201

Stellar helium burning at E=300 keV

Kunz 2001 (Stuttgart)

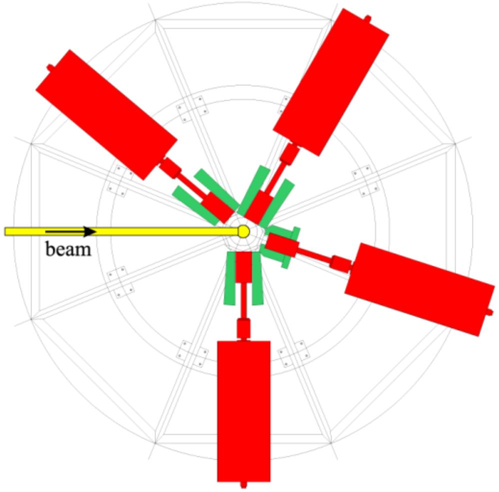

- 4 MV Dynamitron, 480 μA ^{4}He beam
- ^{12}C implanted targets on gold substrate
- 4 large HPGe, with active BGO shield

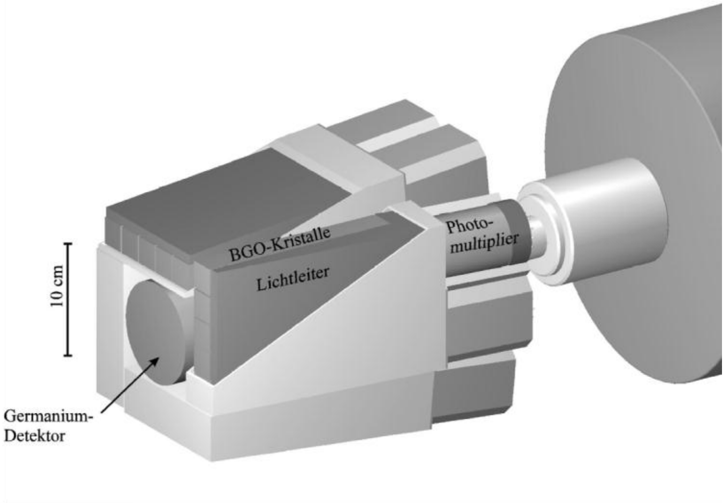

$E_{c.m.}$ = 0.95 - 2.80 MeV

beam target signal

$$\alpha + {}^{12}C \dashrightarrow {}^{16}O + \gamma$$

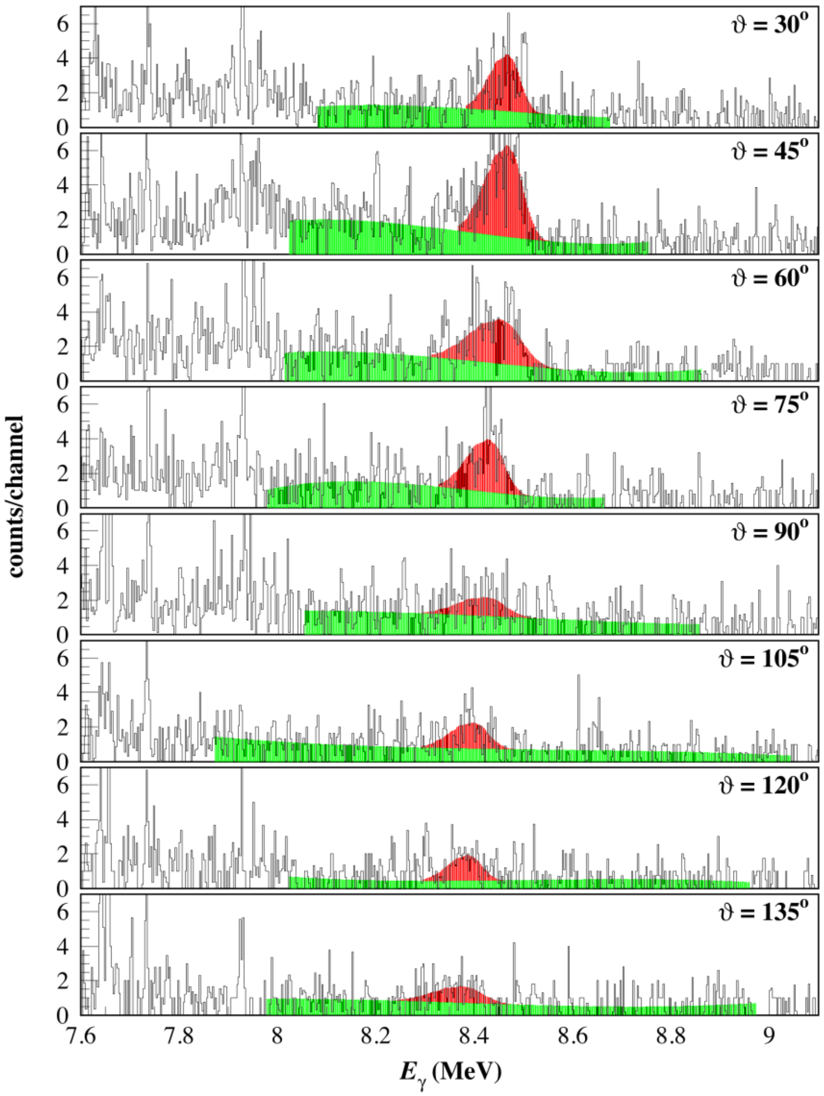

E=1.254 MeV

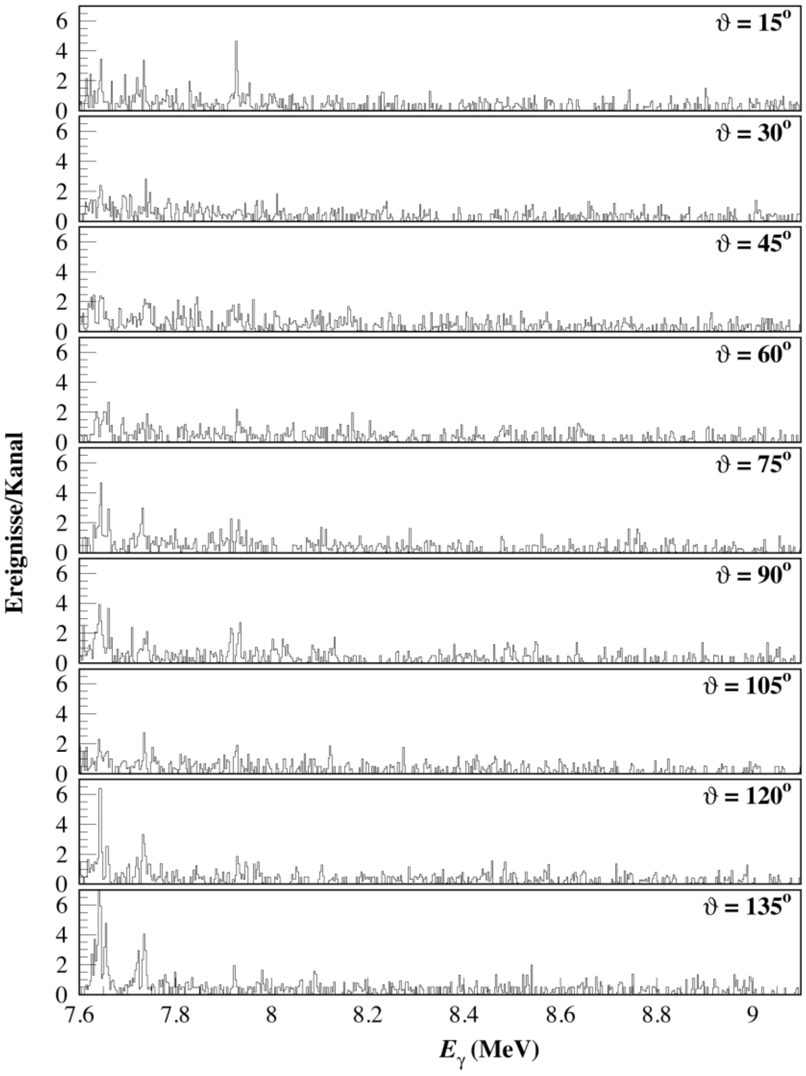

E=0.945 MeV

Gai 2005 (Avery Point)

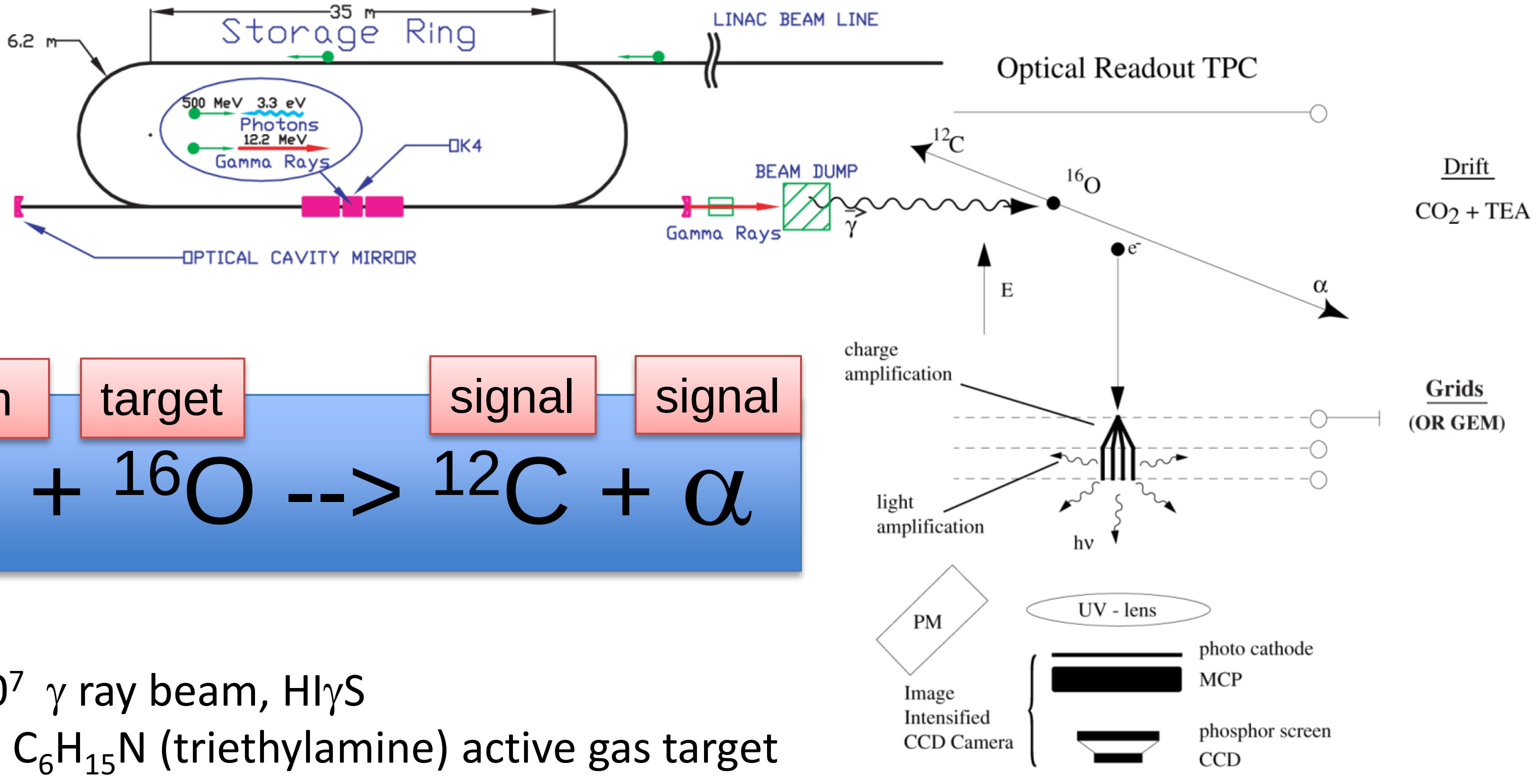

beam | target | signal | signal

$$\gamma + {}^{16}\mathrm{O} \text{ --> } {}^{12}\mathrm{C} + \alpha$$

- 1 x 10^7 γ ray beam, HIγS
- $CO_2 + C_6H_{15}N$ (triethylamine) active gas target

Kyushu (Japan)

beam target signal

$$^{12}C + \alpha \text{ --> } ^{16}O + \gamma$$

- 10 MV Tandem, 15 pμA ^{12}C beam
- Pulsed beam
- ^{4}He windowless gas target
- Detection of ^{16}O (one charged state)
- Recoil separator
- Target took 15 years to develop
- 24 torr, 4.5 cm thick (world record)
- 5 counts/day @ Ecm=0.7 MeV
- BG reduction 10^{16} so far (need x1000 better)

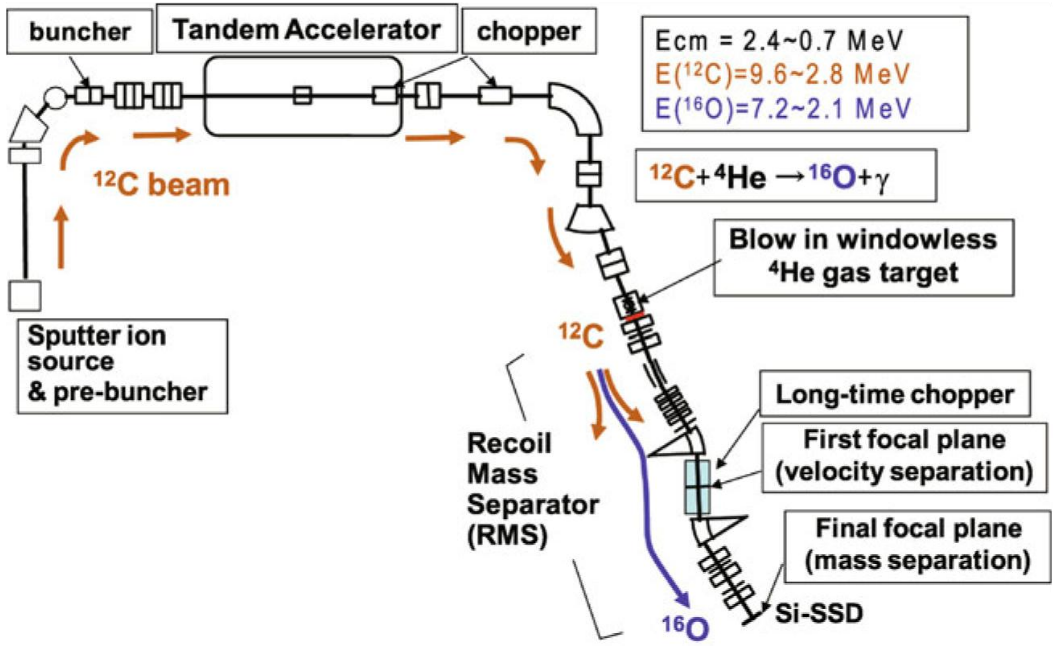

Shanghai

beam target signal signal

$$\gamma + {}^{16}O \dashrightarrow {}^{12}C + \alpha$$

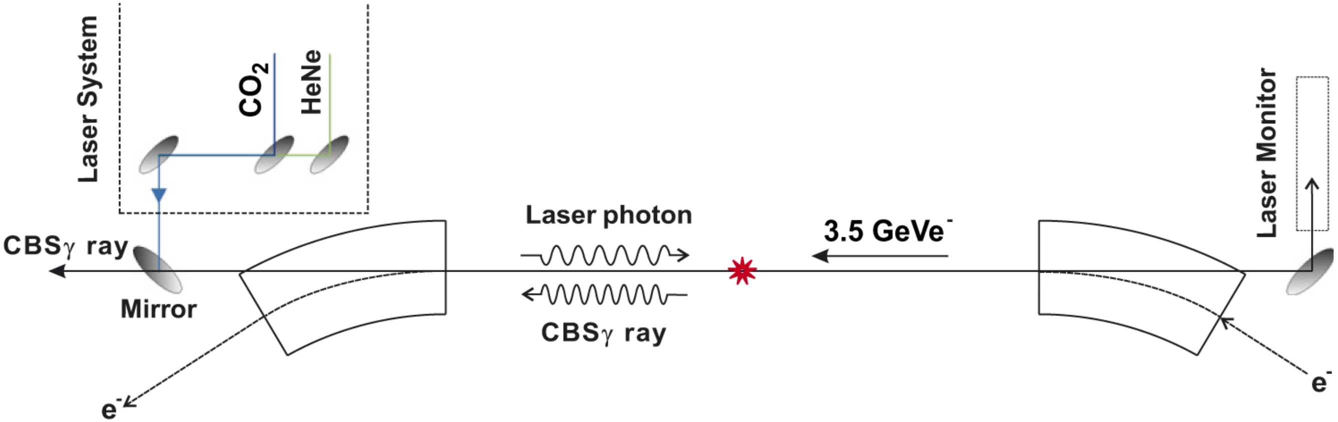

- γ ray beam, Shanghai Laser Electron Gamma Source (SLEGS)
- Polarized photons
- 3.5 GeV electron beam
- Light source CO_2 laser @10 kW
- Beam flux 5 x 10^8 γ/s @ 2% resolution
- Time projection chamber (???)
- Could measure E=0.8 MeV with 20-30% uncertainty

St. George (Notre Dame)

beam target signal signal

$^{12}C + \alpha \text{ --> } {}^{16}O + \gamma$

Couder 2008

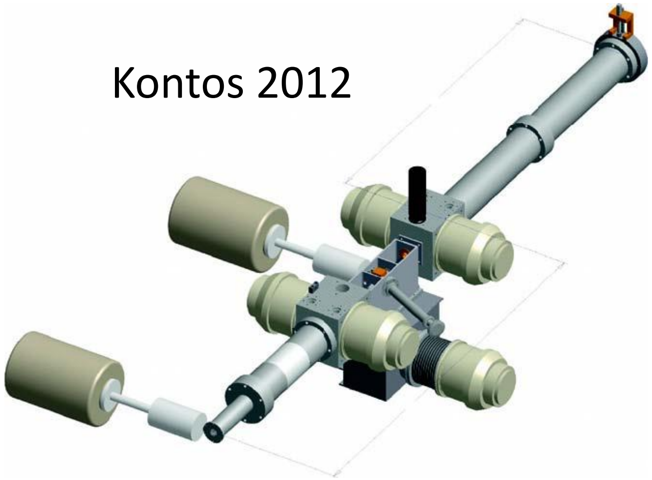

Kontos 2012

- Recoil mass separator
- Time of flight capabilities
- 5 MV vertical accelerator
- Windowless gas target (HIPPO) @ 2.7×10^{17} atoms/cm^2, 2.1 mm
- High beam currents (< 10 mA)
- Array of Ge detectors in close geometry

Erna (Caserta)

beam target signal signal

$^{12}C + \alpha$ --> $^{16}O + \gamma$

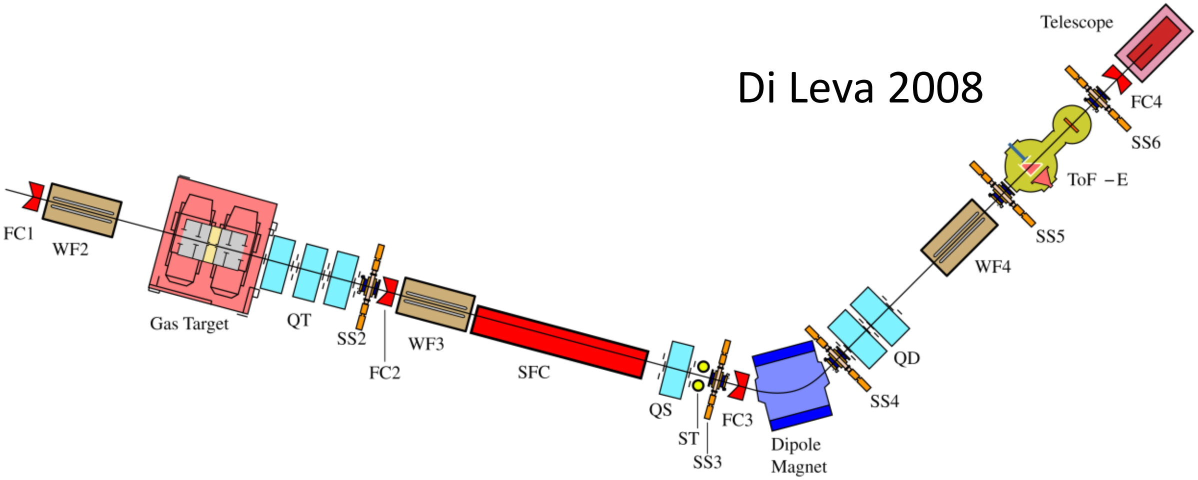

Di Leva 2008

- Recoil mass separator
- Time of flight capabilities
- 3 MV Pelletron
- Windowless gas target 4x10^{17} atoms/cm^{2}

Underground facilities

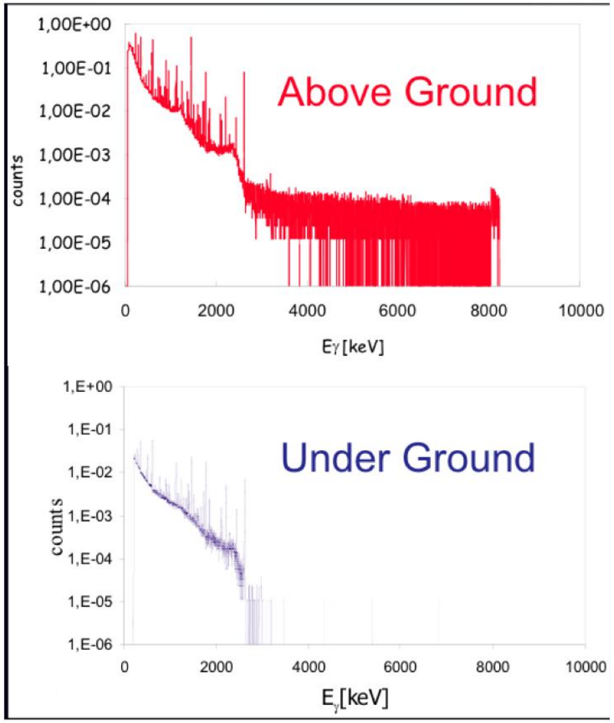

Surface background rates: events/second

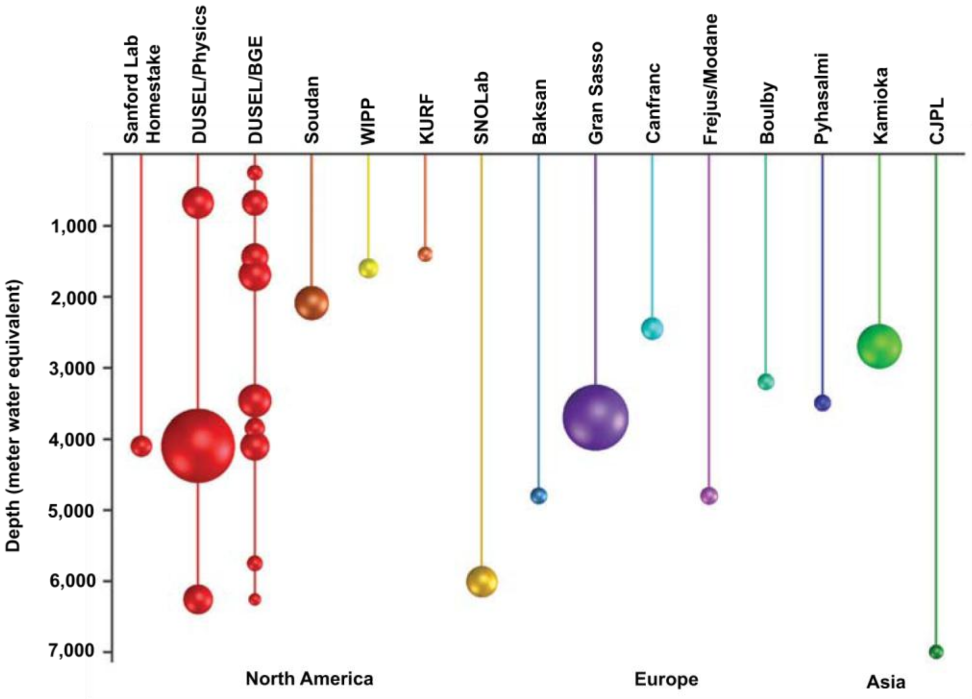

The National Academies 2012

LUNA MV (Gran Sasso)
CUNA Canfranc (Spanish Pyrenees)
Felsenkeller (Dresden) *Not deep enough*
Boulby (North Yorkshire) *Uncertain funding*

DIANA (DUSEL)

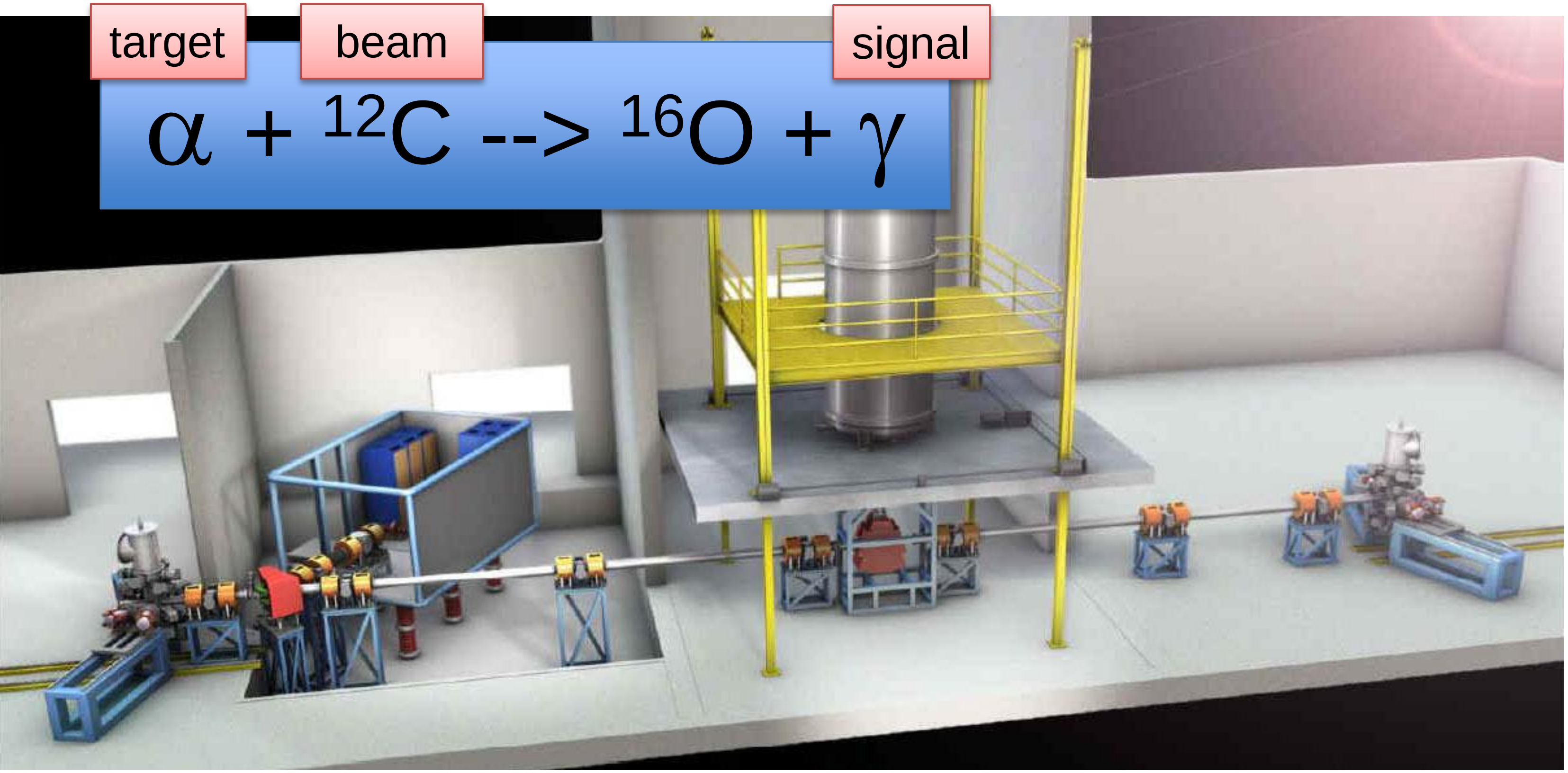

target

beam

signal

$$\alpha + {}^{12}\mathrm{C} \text{ --> } {}^{16}\mathrm{O} + \gamma$$

- Deep Underground facility
- Ultra high density gas target (JENSA collaboration)
- High beam currents (~10 mA)
- Array of Ge detectors in close geometry

Experiment Luminosities

Lum = (beam current) x (target density)

$^{12}C(\alpha,\gamma)^{16}O$

Lum(Kunz) ~ 8×10^{33} $cm^{-2}s^{-1}$

Efficiency ~ 1×10^{-3}

$^{16}O(\gamma,\alpha)^{12}C$

Lum(HIγS) ~ 4×10^{30} $cm^{-2}s^{-1}$

Lum(JLab) ~ 8×10^{31} $cm^{-2}s^{-1}$

$\lambda_\gamma^2/\lambda_\alpha^2 \sim 60$

Bubble chamber: solid angle x efficiency = 100%

Expt	Beam current (mA)	Detector Effic. (%)	Target	Meas. Time (h)
Redder	0.7	Ge, 35	12C, ~3E18	900
Ouellet	0.03	Ge, 30	12C, 5E18	1950
Roters	0.02	BGO, 270	4He, 1E19	5000
Kunz	0.45	Ge, 100	12C, 3E18	700
EUROGAM	0.34	Ge, 70	1E19	2100

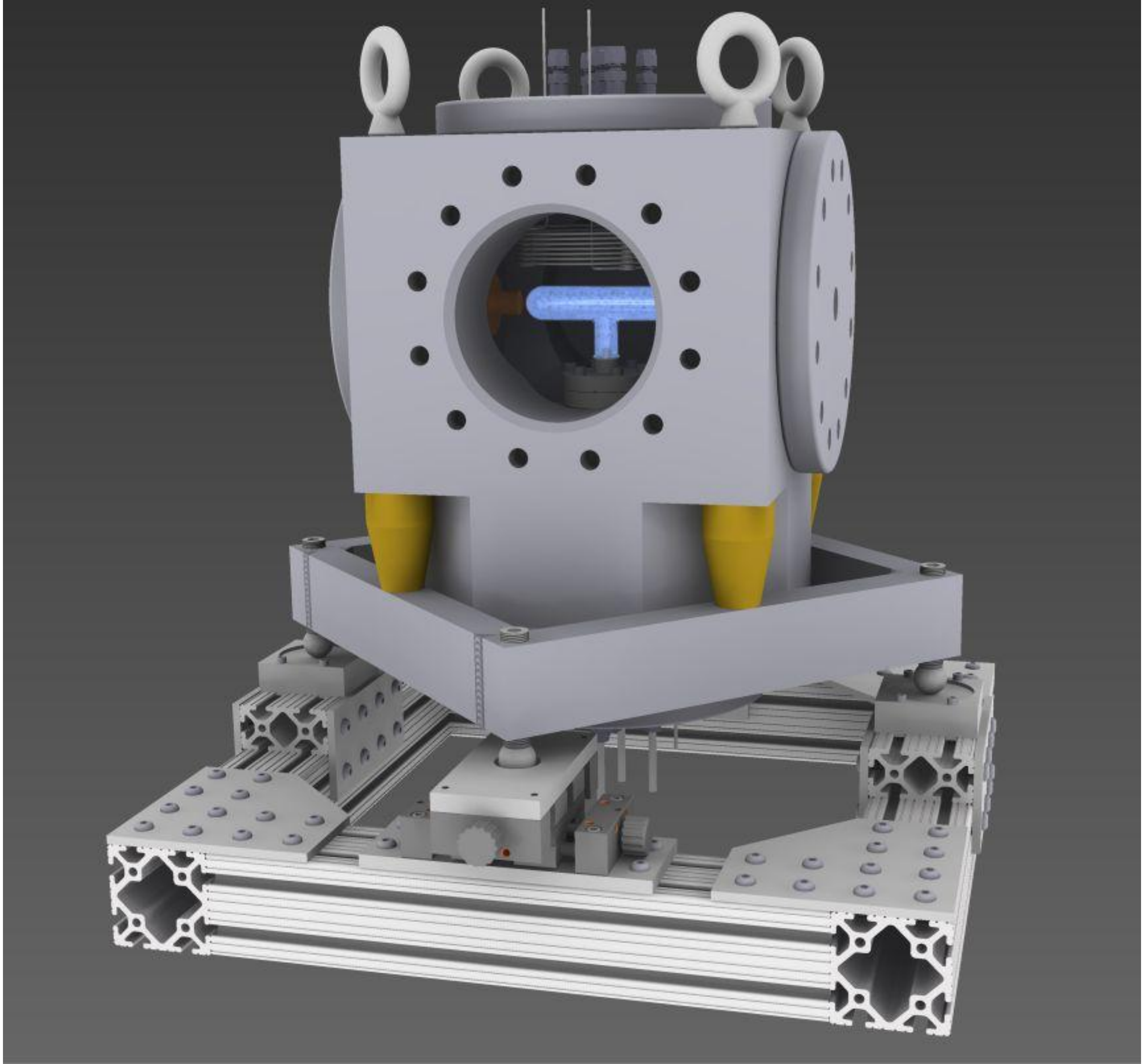

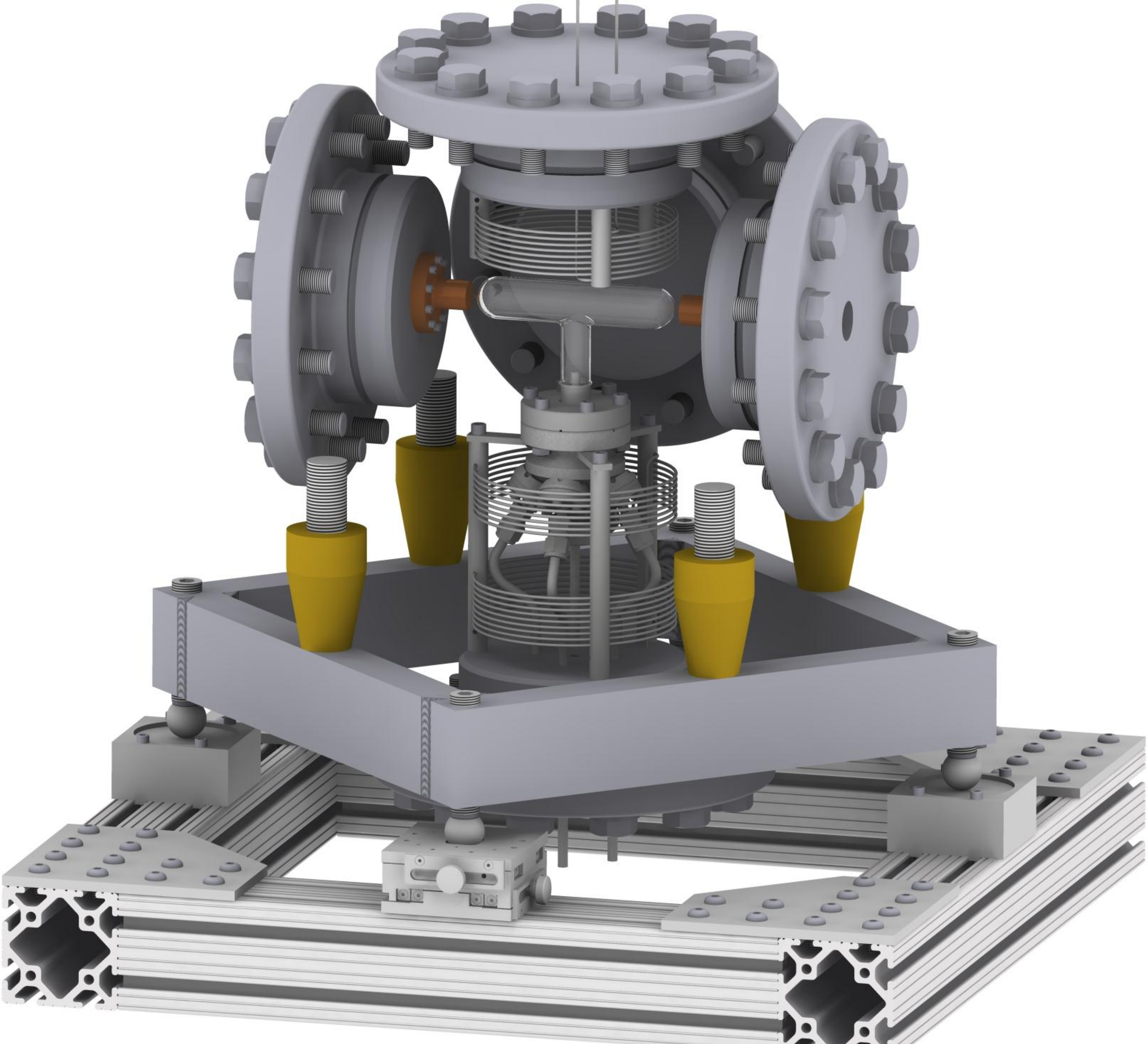

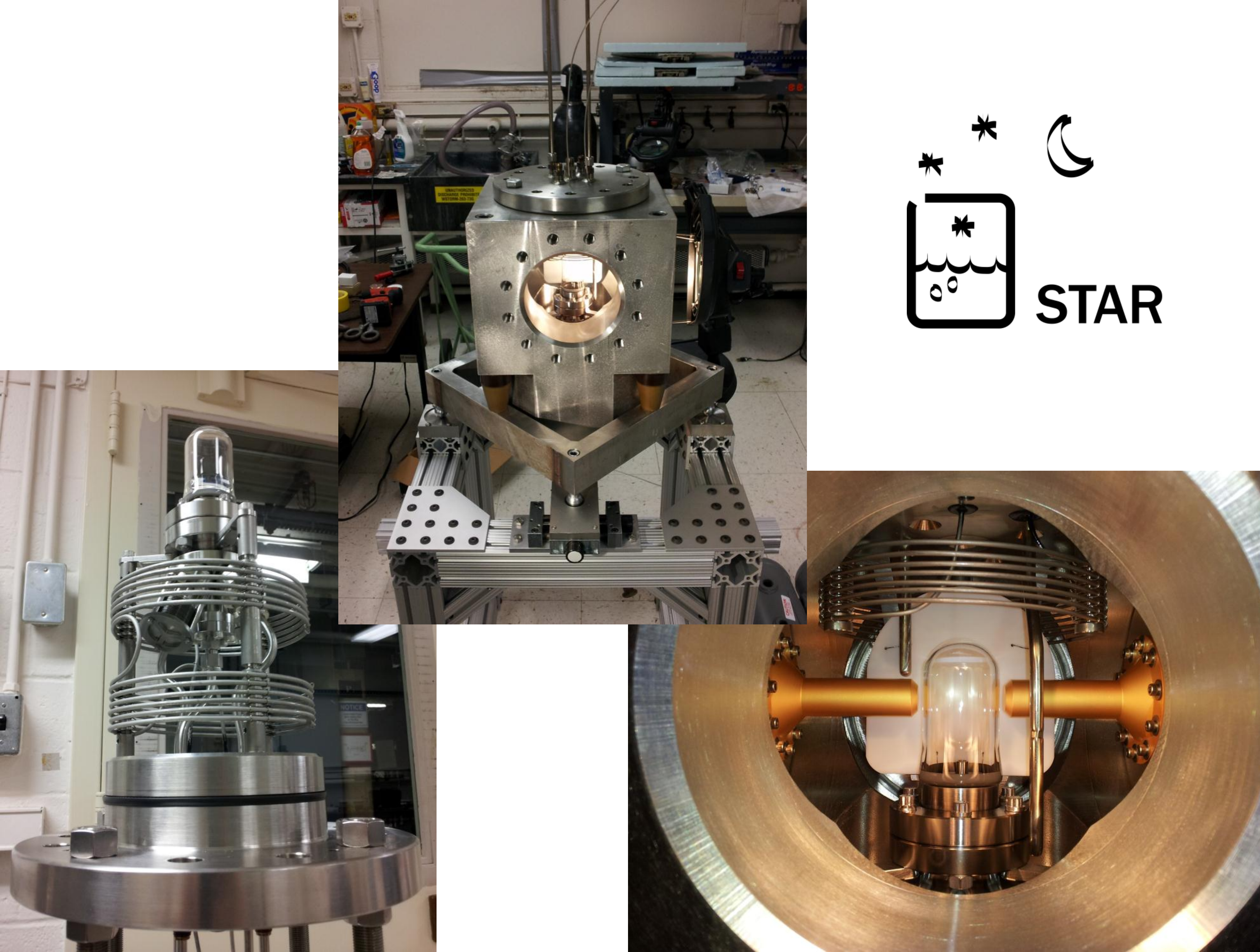

STAR

Bubble chamber

We completed both the first test of the prototype of the bubble chamber detector and the characterization of the main sources of background for the experiments.

We have provided a proof of principle of operation as a low rate counter and proposed a scheme for higher count rates.

The thin glass vessel appears to be the best design for a water-based bubble chamber.

Bremsstrahlung from the electrons in the ring manifests mainly as neutrons. Particle ID would help separating these events from the α-particle + heavy ion signal.

In the long run, the success of the project will depend on beam intensity, the level of depletion of water, and particle ID.

$$N_A\langle\sigma\upsilon\rangle = N_A\sqrt{\frac{8}{\pi\mu(kT)^3}}\int_0^\infty \sigma(E)E\exp\left(-\frac{E}{kT}\right)dE$$

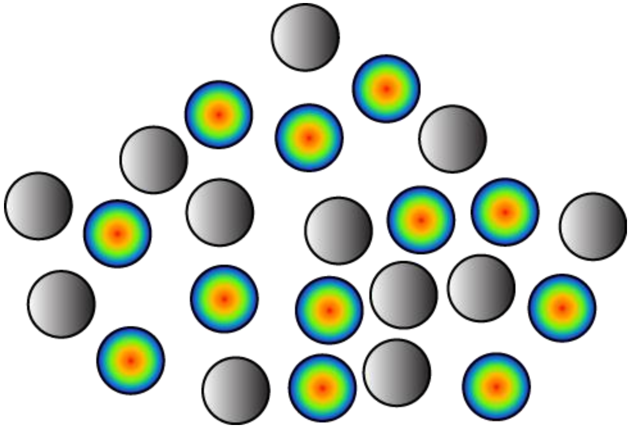

T

N_1, N_2

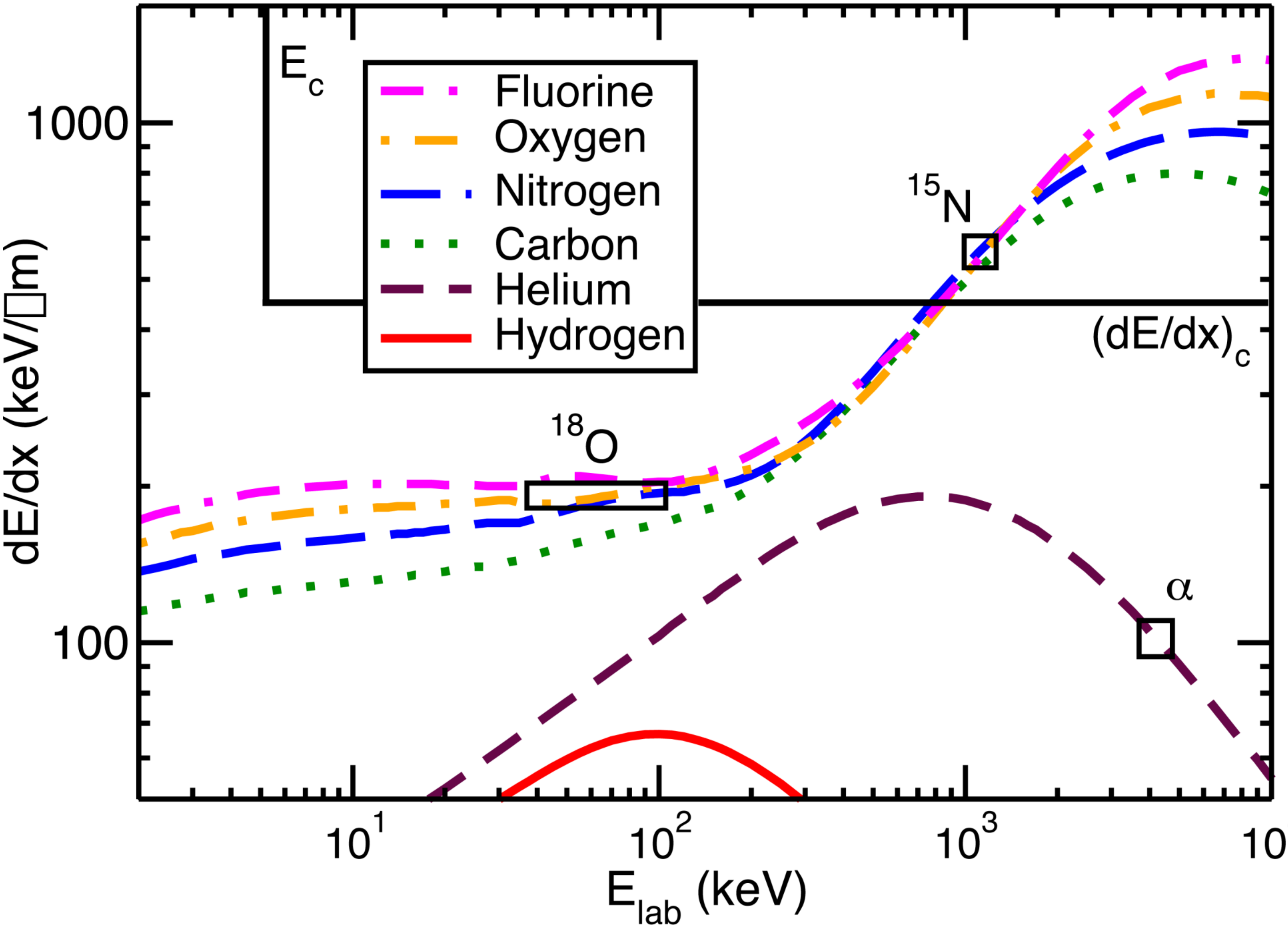
E$_c$
Fluorine
Oxygen
Nitrogen
Carbon
Helium
Hydrogen
^{15}N
^{18}O
α
(dE/dx)$_c$
1000
100
dE/dx (keV/□m)
10^1
10^2
10^3
10^4
E$_{lab}$ (keV)

Superheating of water

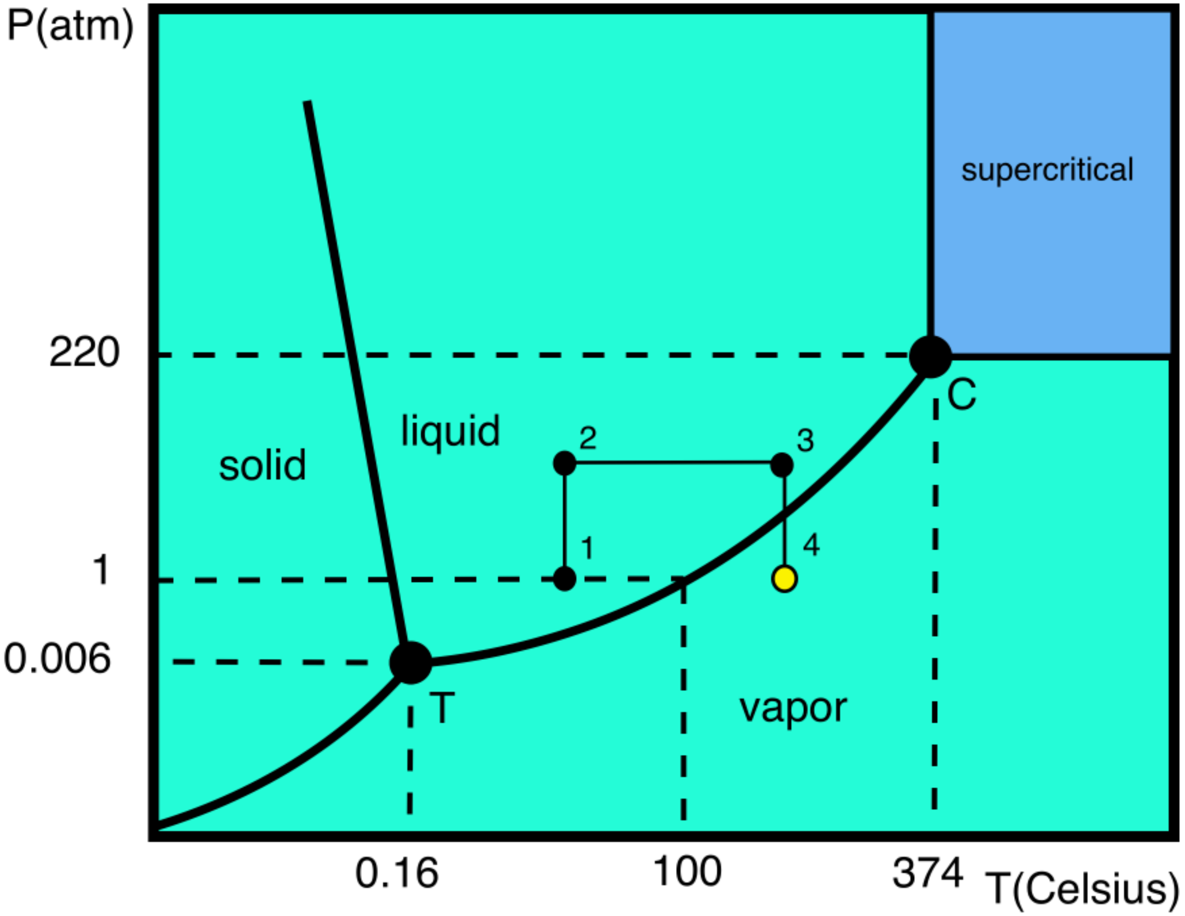

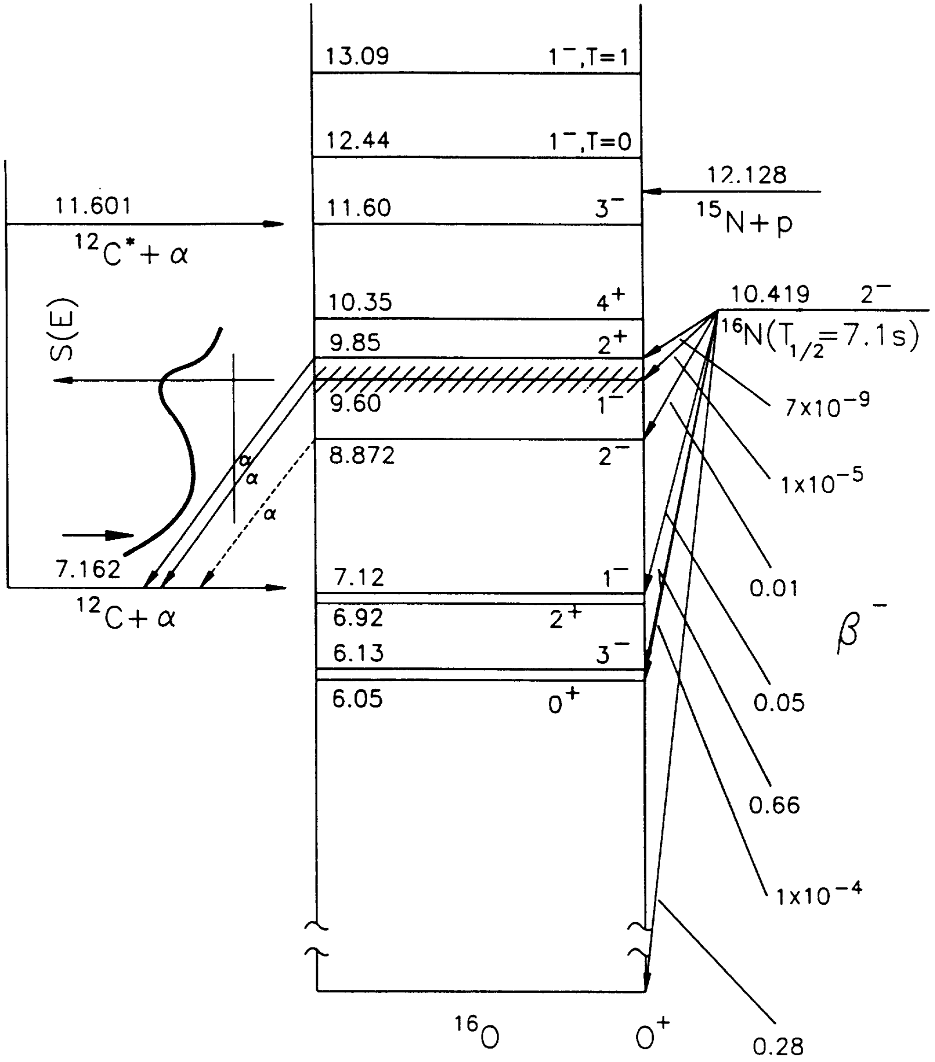

FIG. 1. Partial energy-level diagram for ^{16}O (adapted from [4]).